C.I.P.	7,65 Parabellum Country of Origin: DE	TAB.	IV
		Date	84-06-14
		Revision	08-09-23

Alternative Names: 7,65 Para, 7,65 Luger, 30 Luger

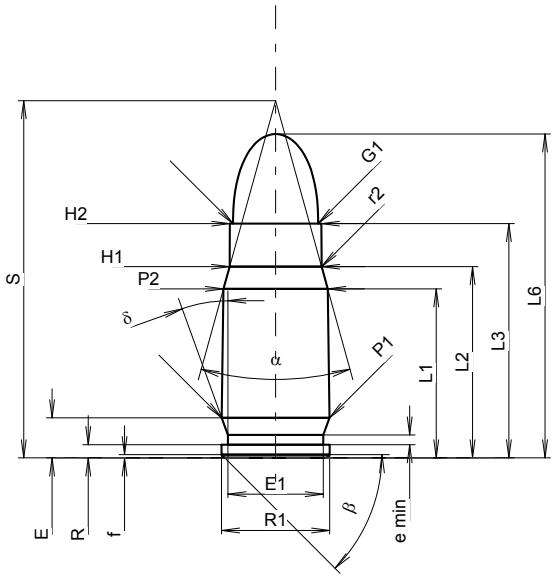

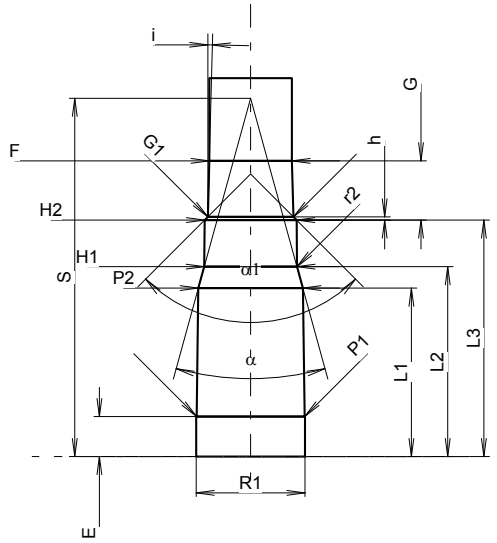

Scale 1.44:1

CARTRIDGE MAXI

Lengths

L1 1)*	=	15.58	-0.20
L2 1)*	=	17.62	-0.20
L3 1)	=	21.59	
L4	=		
L5	=		
L6	=	29.85	

Case Head

R	=	1.22
R1	=	9.98
R3	=	
E	=	3.69
E1	=	8.79
e min	=	0.90
δ	=	20°
f	=	0.30
β	=	45°

Powder Chamber

P1	=	9.93	
P2 1)*	=	9.61	-0.20

Junction Cone

α	=	30°57'41"
S	=	32.93
r1 min	=	
r2	=	2.50

Collar

H1 *	=	8.48
H2 1)	=	8.43

Projectile

G1 1)	=	7.85
G2	=	
F	=	
L3+G 1)	=	27.05

Pressures (Energies)
Method Transducer

Pmax	=	2350	bar
PK	=	2703	bar
PE	=	3055	bar
M	=	12.50	

Miscellaneous Dimensions

Fe 1)6)	=	0.20
delta L	=	

CHAMBER MINI

Lengths

L1 *	=	15.52
L2 *	=	17.50
L3 1)	=	21.80

Breech

R	=	1.22
R1	=	10.03
R2	=	
R3	=	
r	=	

Powder Chamber

E	=	3.69
P1 1)	=	9.96
P2 *	=	9.64

Junction Cone

α 1)	=	30°46'45"
S	=	33.03
r1 max	=	
r2	=	2.50

Collar

H1 *	=	8.55
H2 1)	=	8.48

Commencement of Rifling

G1 1)*	=	7.90
G 1)*	=	5.46
α1	=	90°
h *	=	0.29
s	=	
i 1)	=	1°33'03"
w	=	

Barrel

F 1)*	=	7.62
Z 1)	=	7.83

Grooves

b	=	3.05	
N	=	4	
u	=	275.00	
Q	=	46.92	mm²

Dimensions in << mm >>
Dimensions and Tolerances for Proof Barrels
see Appendix CR 1.

Notes:
1) Check for safety reasons
6) Headspace on Case Mouth
* Basic dimensions